SANITARY FIXING SYSTEMS

INSTALLATION INSTRUCTION

A6003

WC, BIDET&SEMI-PED FIXING SET

Usage for fixing of: standing toilets and bidets

CONTENTS

1	2x Floor brackets
2	2x Wallplugs S10x50
3	2x Hex head screw 6x60
4	2x Washers
5	2x St. steel screw 5x60
6	2x Nylon bushes
7	2x Chrome caps

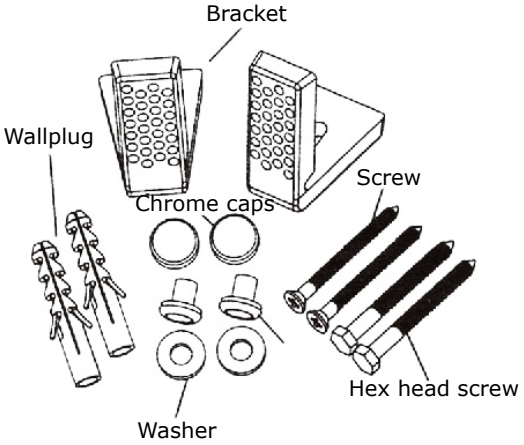

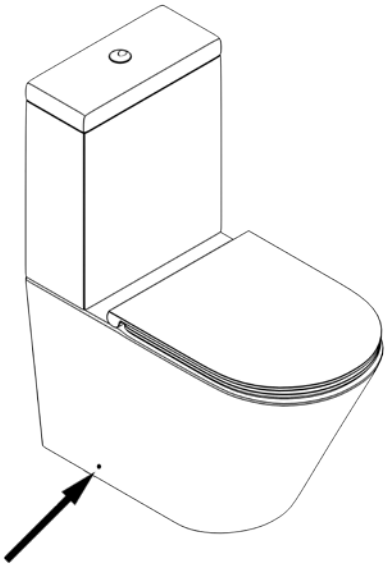

METHOD OF FIXING PAN TO FLOOR/WALL

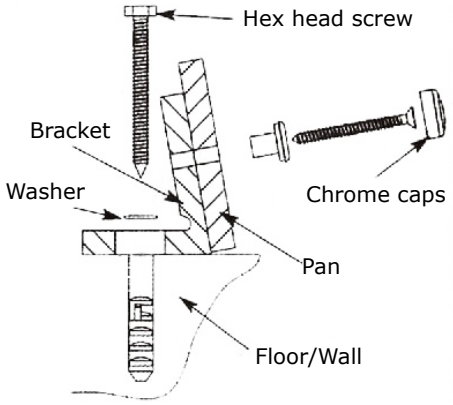

INSTALLATION

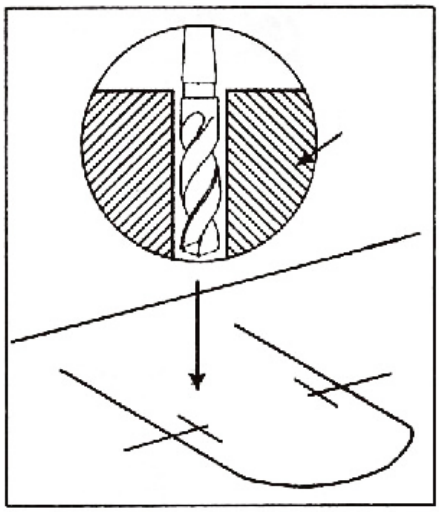

Drill Dia 10mm,
min. drill hole depth 60mm

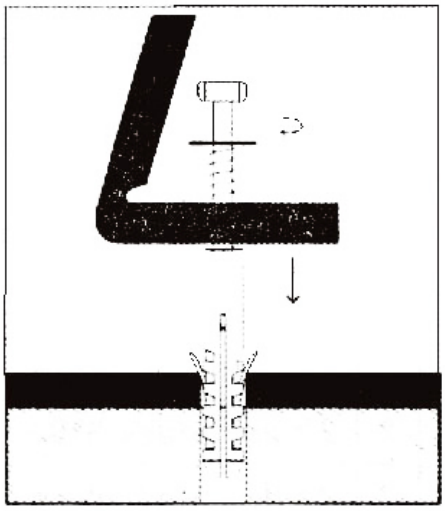

Tighten fixation bracket

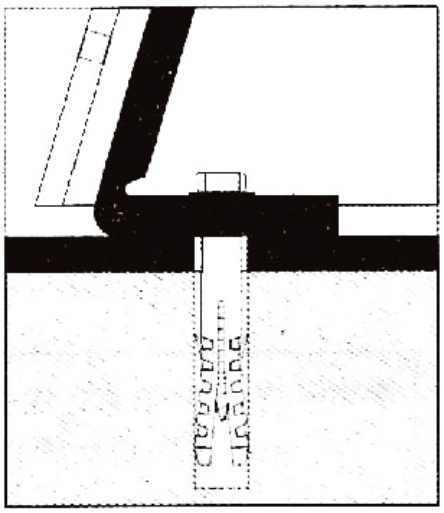

Put on the new toilet/pedestal

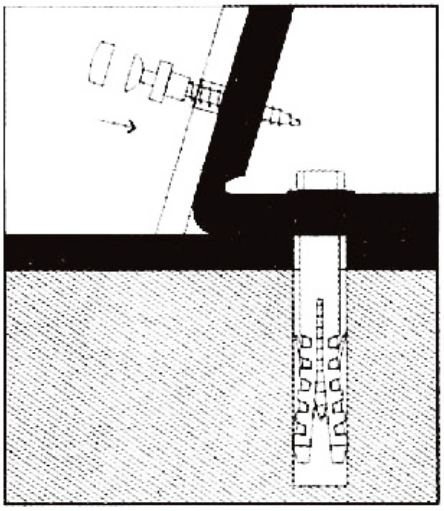

Tighten the screws

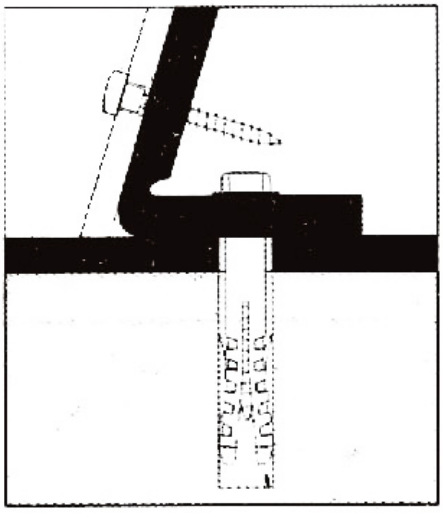

Put on the chrome caps

Geberit Product Installation-inlet valve “Impuls360”

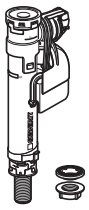

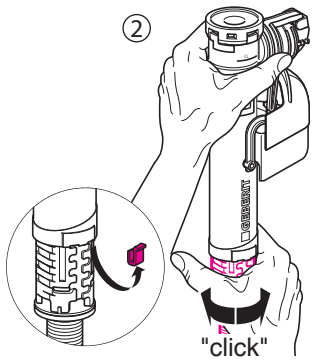

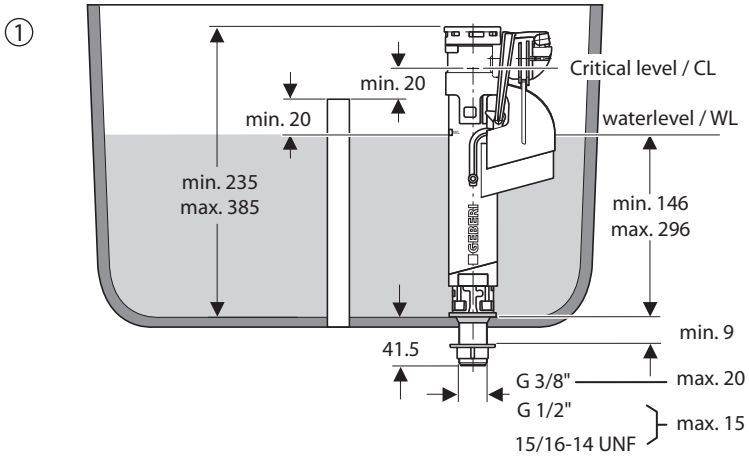

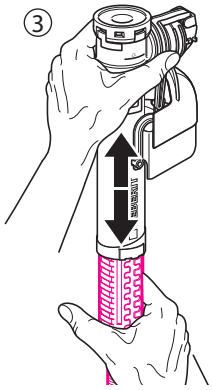

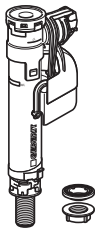

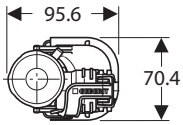

0.01 - 1MPa

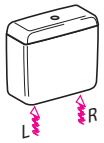

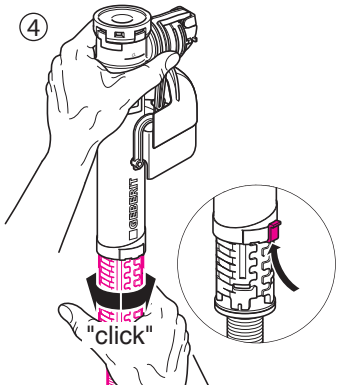

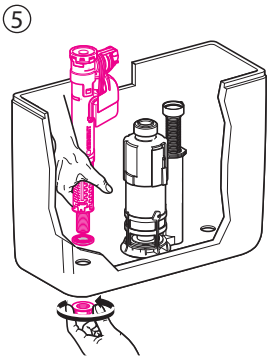

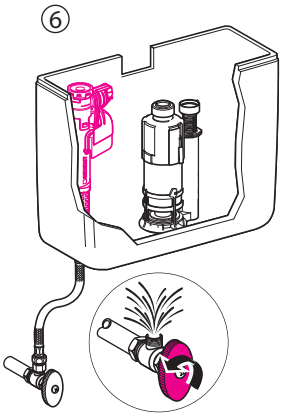

170.523.00.0

GEBERIT

Geberit Product Installation-inlet valve “Impuls360”

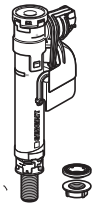

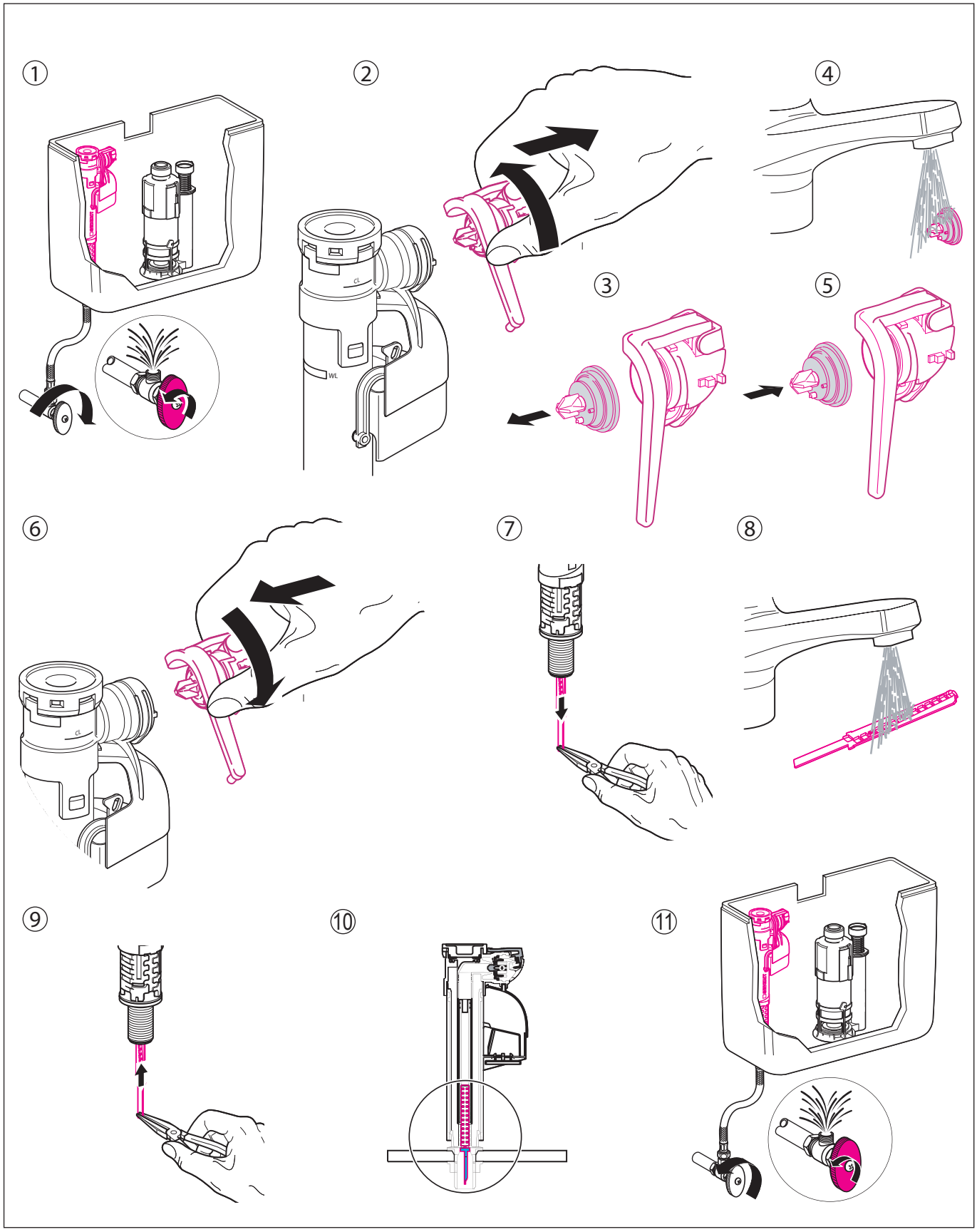

GEBERIT

Geberit Product Installation-outlet valve “Impuls250”

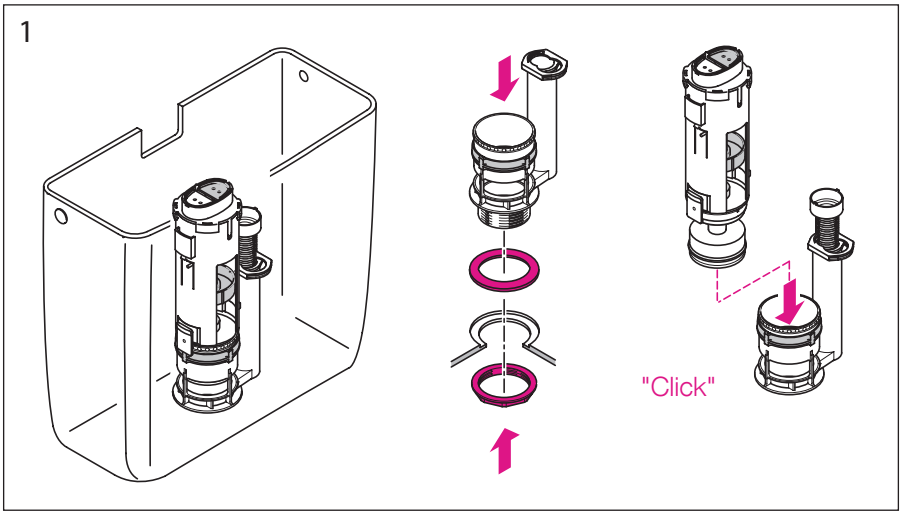

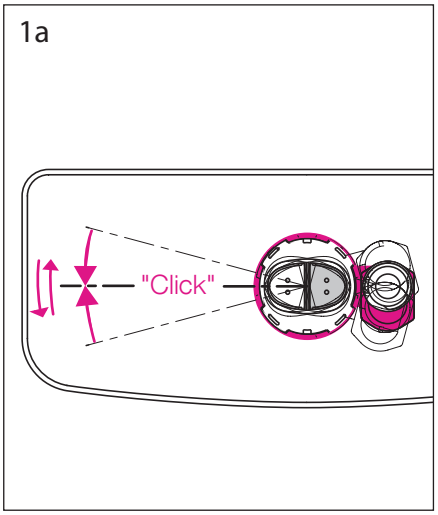

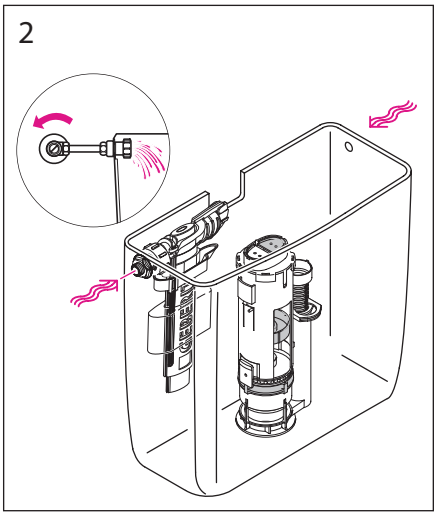

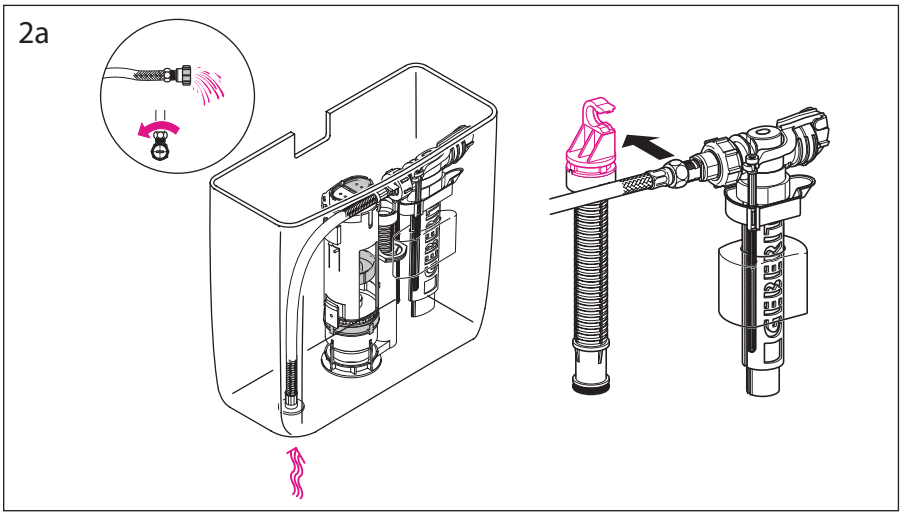

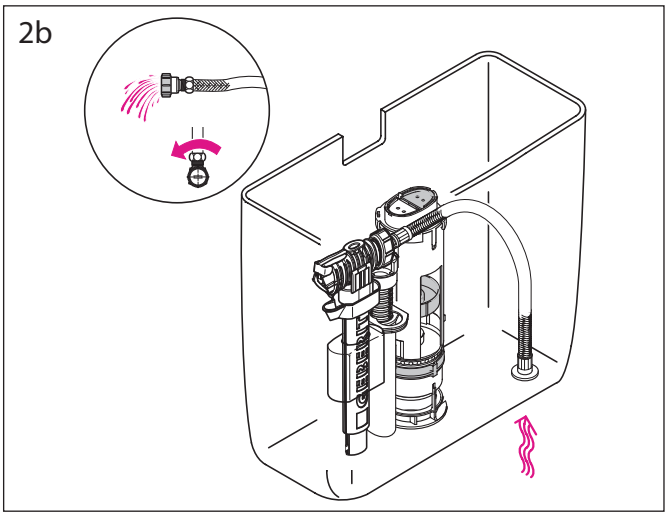

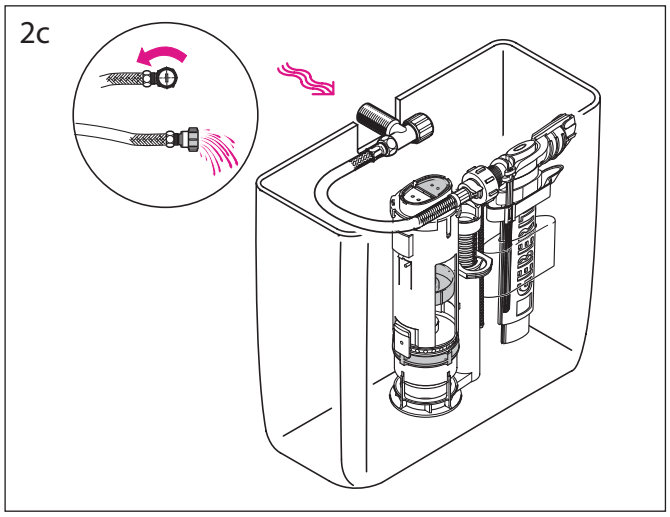

int. 8271-02

997.948.00.0

GEBERIT

Geberit Product Installation-outlet valve “Impuls250”

3

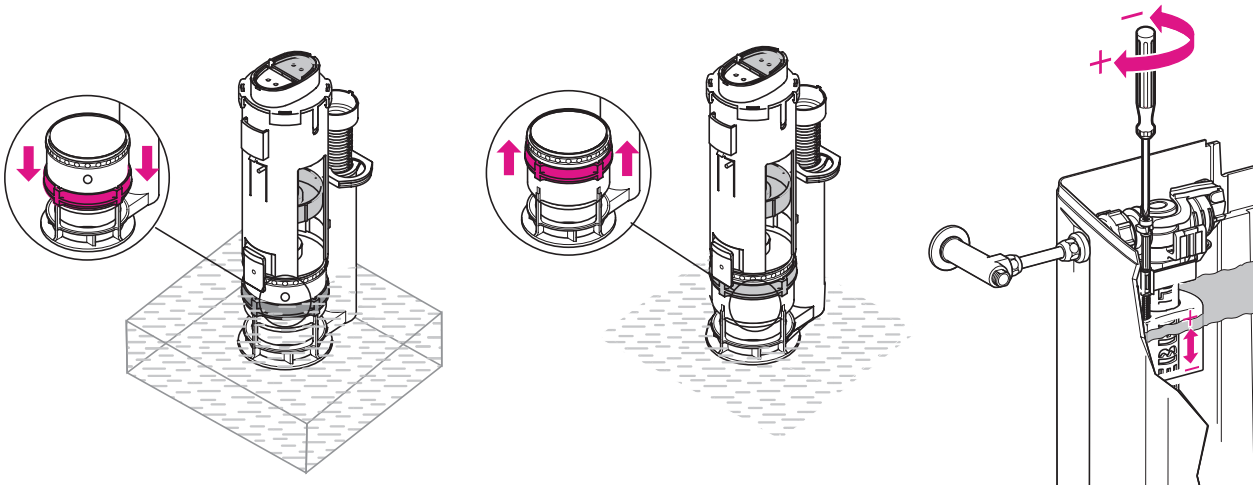

3a

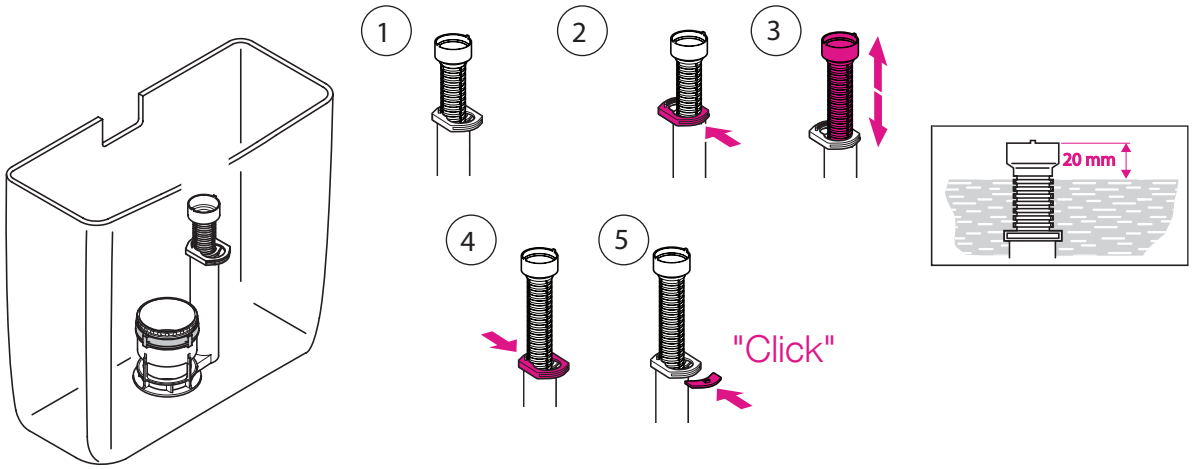

3b

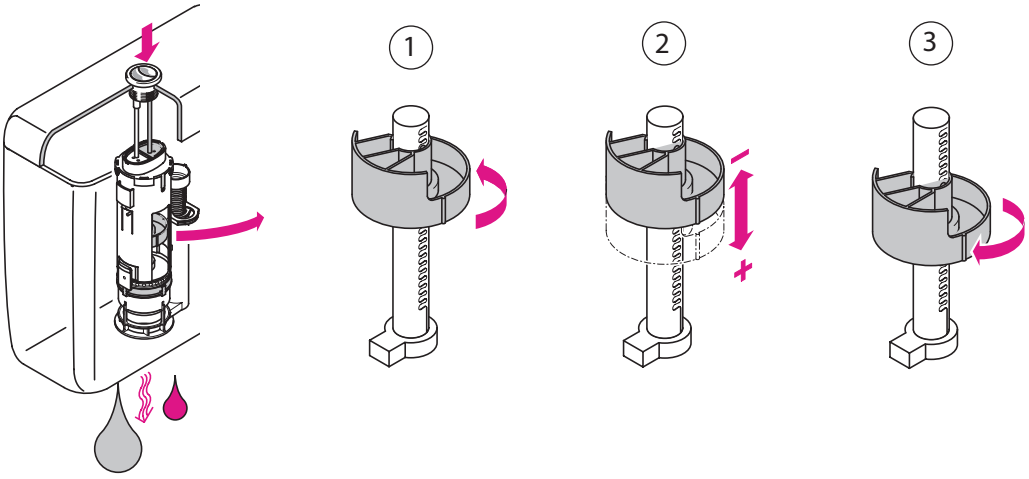

GEBERIT

Geberit Product Installation-outlet valve “Impuls250”

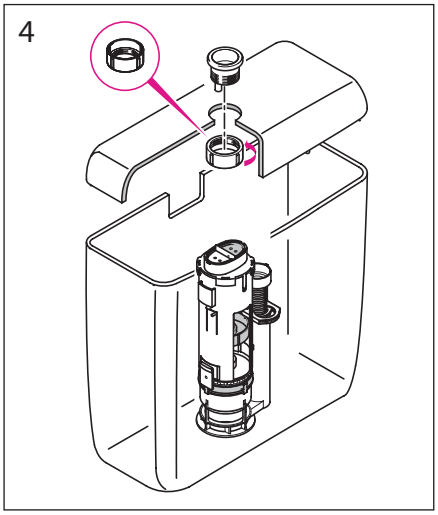

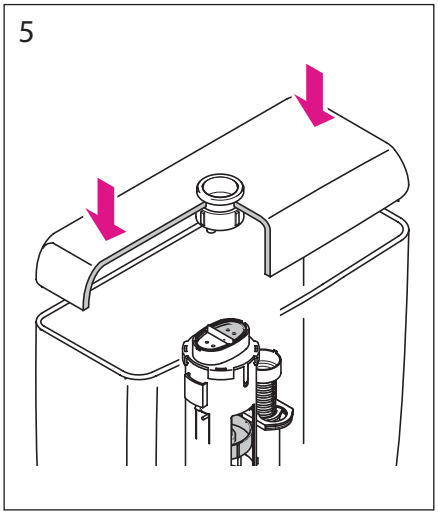

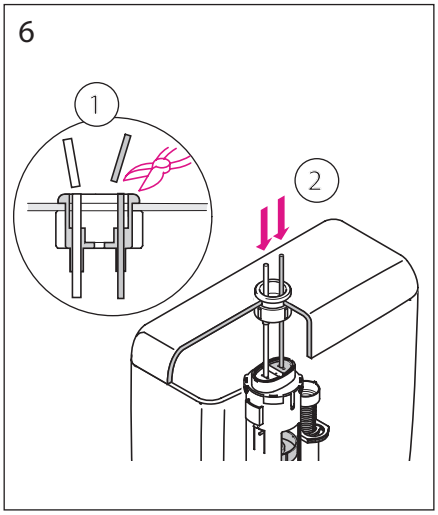

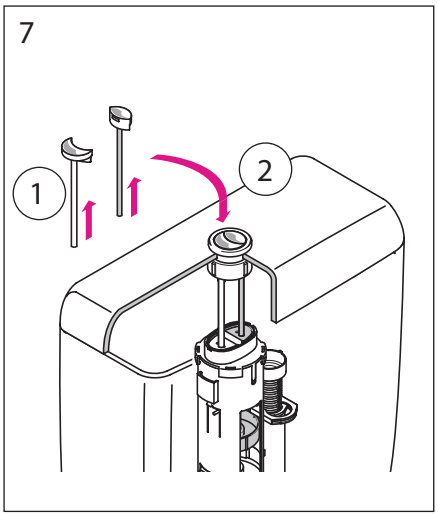

Service

GEBERIT

Geberit Product Installation-outlet valve “Impuls250”

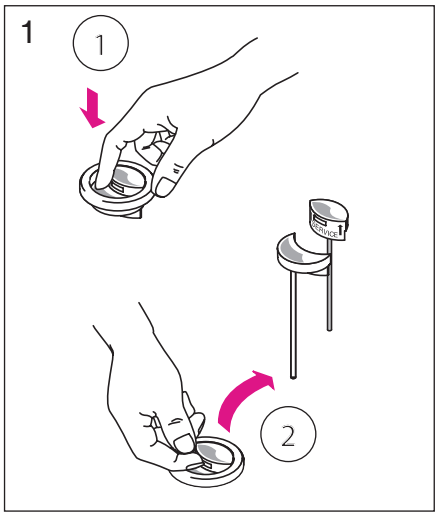

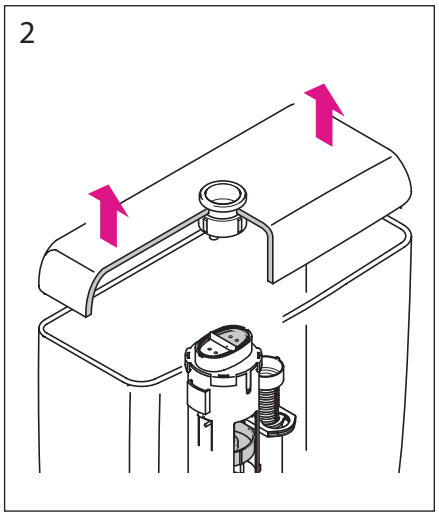

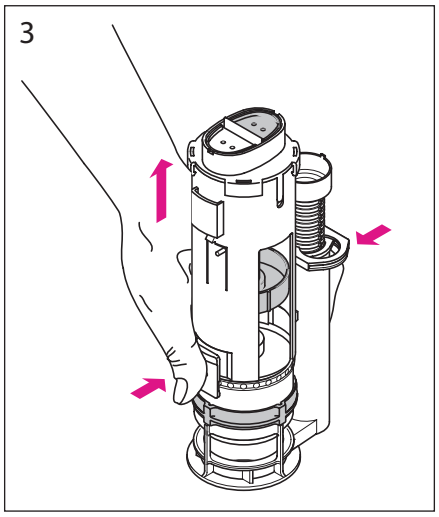

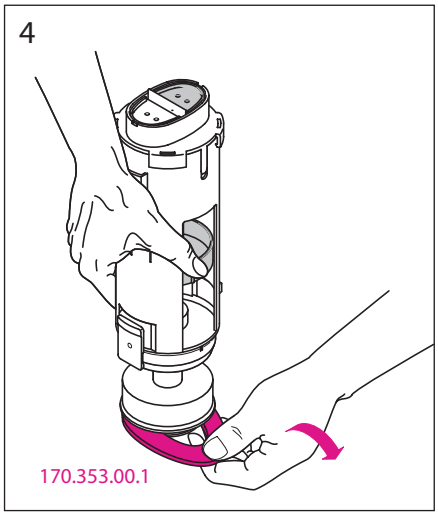

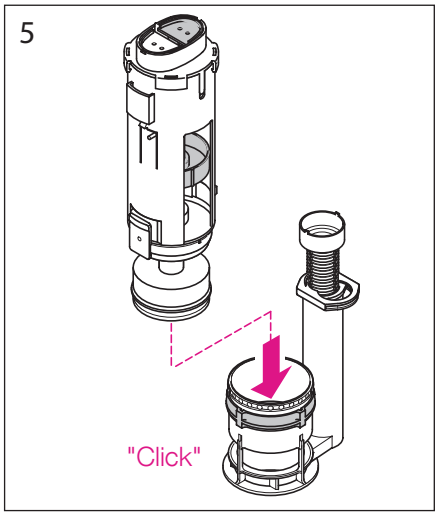

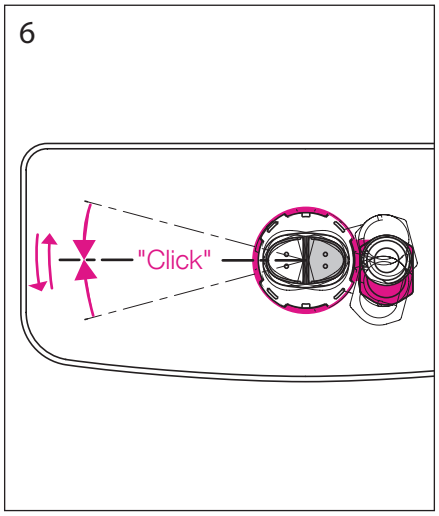

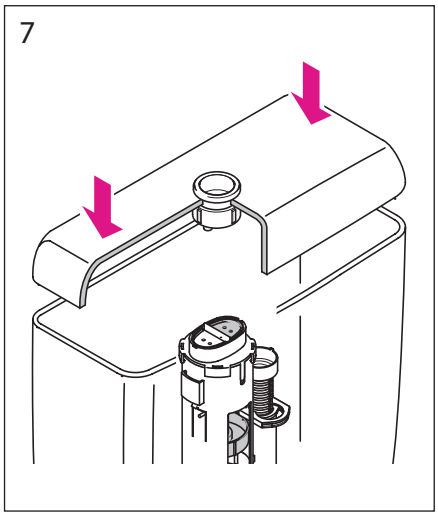

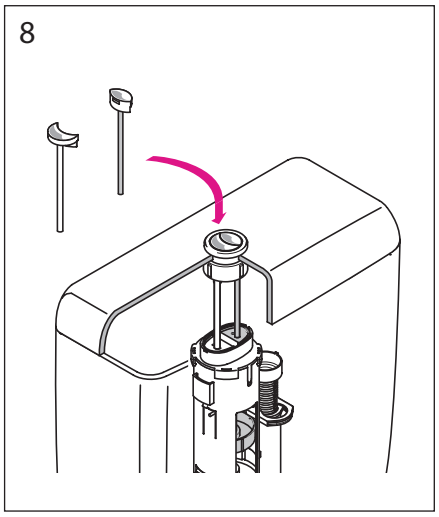

GEBERIT