CABINETS MANUAL

PULCHER Design
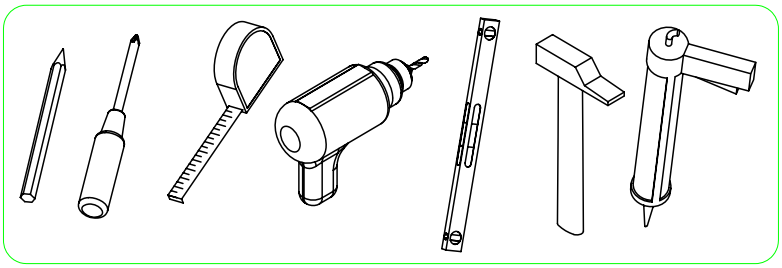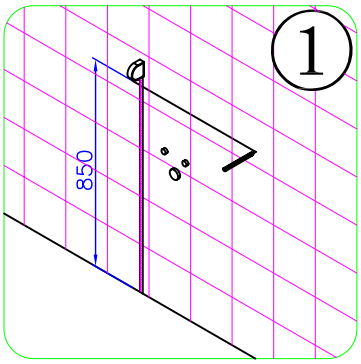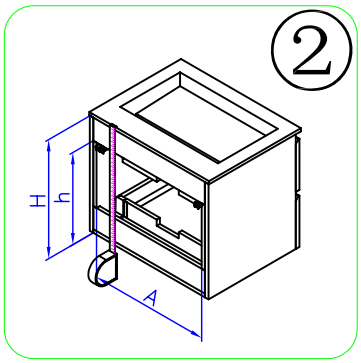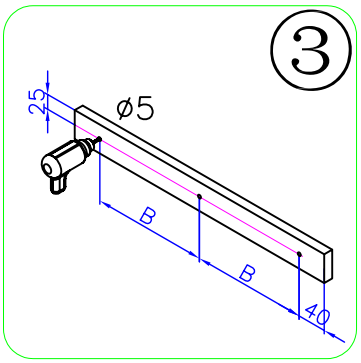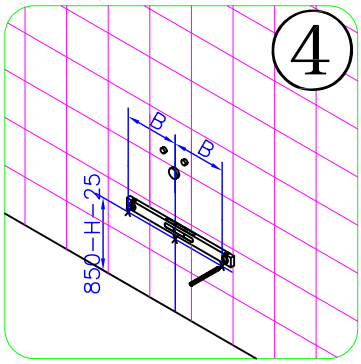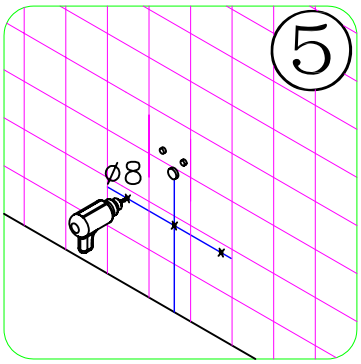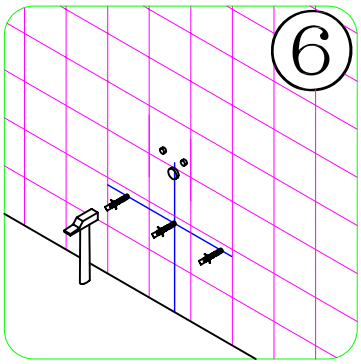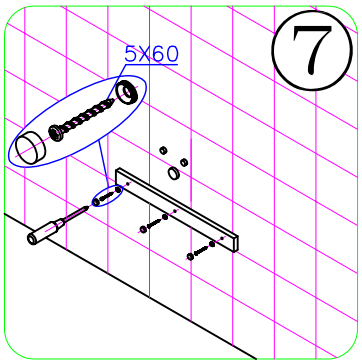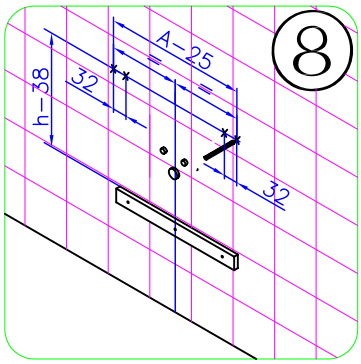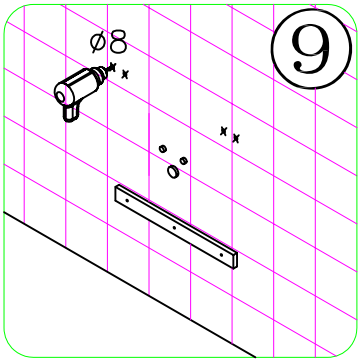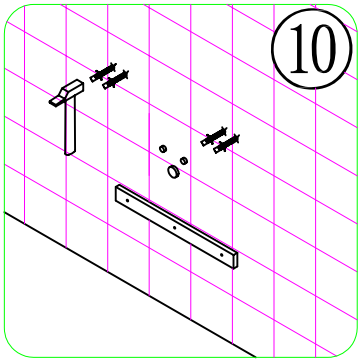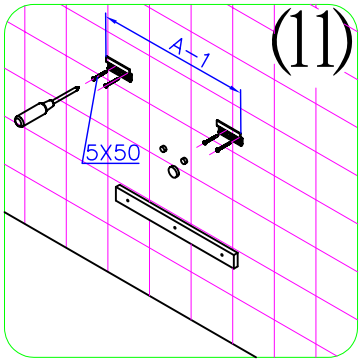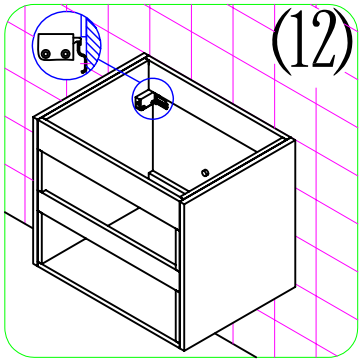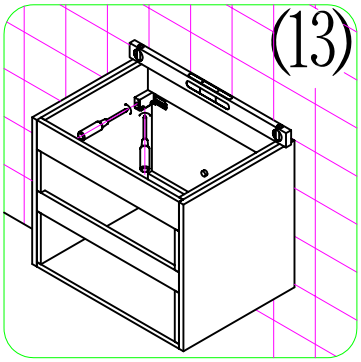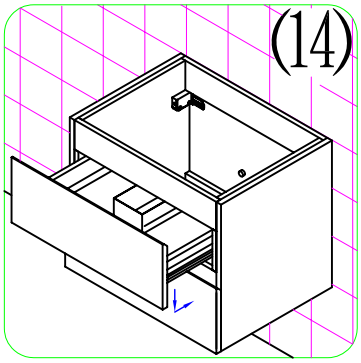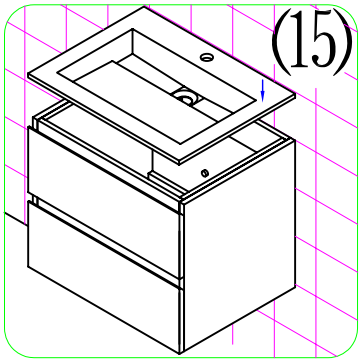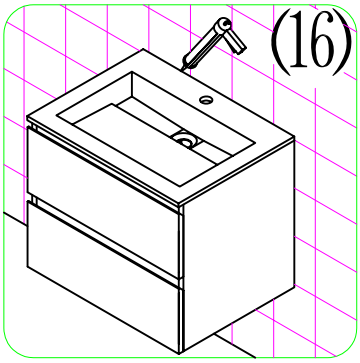
[WWW.PULCHER-DESIGN.COM]